DESCRIPTION
Solenoid valve 2 way normally closed
direct acting poppet type

CONSTRUCTION

Body	Brass
Armature tube	Stainless steel
Plunger and core	Stainless steel
Springs	Stainless steel
Seal material	NBR
	FPM
	EPDM
	PTFE

FEATURES
Maximum allowable pressure 80 bar *
Maximum fluid viscosity 25cSt (mm ²/s)
Ambient temperature : with class F coil -10°C +55°C
with class H coil -10°C +80°C
Universal mounting position

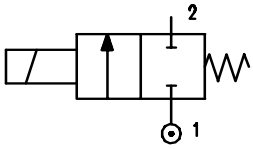

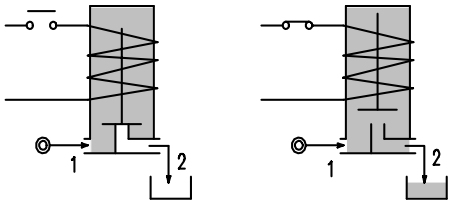

OPTIONS : Electroless nickel plating
For use with oxygen

CODE ① ②	Connection G ISO 228	Orifice mm	KV m³/h	Differential pressure bar Min	Max AC	Max DC	Nominal power AC Inrush	VA Holding	DC Watt	Coil Series	Width	Seal ①	Temp. range °C
E106C.....30///.....	3/8”	3	0.25	0	15	10	20	15	10	2	30		
E106C.....35///.....	3/8”	3.5	0.32	0	10	8	20	15	10	2	30		
E106C.....40///.....	3/8”	4	0.36	0	8	5	20	15	10	2	30		
E106C.....45///.....	3/8”	4.5	0.41	0	6.5	3.5	20	15	10	2	30	NBR=B	-10 +90
E106D.....30///.....	1/2”	3	0.25	0	15	10	20	15	10	2	30		
E106D.....35///.....	1/2”	3.5	0.32	0	10	8	20	15	10	2	30		
E106D.....40///.....	1/2”	4	0.36	0	8	5	20	15	10	2	30	EPDM=E	<+140
E106D.....45///.....	1/2”	4.5	0.41	0	6.5	3.5	20	15	10	2	30		
E106D.....52///.....	1/2”	5.2	0.47	0	4	1.8	20	15	10	2	30		
E106D.....64///.....	1/2”	6.4	0.64	0	3	1	20	15	10	2	30		
E106C.....30///.....	3/8”	3	0.25	0	25	24	40	30	27	5	36	FPM=V	-10 +130
E106C.....35///.....	3/8”	3.5	0.32	0	20	19	40	30	27	5	36		
E106C.....40///.....	3/8”	4	0.36	0	16	15	40	30	27	5	36		
E106C.....45///.....	3/8”	4.5	0.41	0	14	13	40	30	27	5	36	PTFE=W	-10 +160
E106D.....30///.....	1/2”	3	0.25	0	25	24	40	30	27	5	36	③	
E106D.....35///.....	1/2”	3.5	0.32	0	20	19	40	30	27	5	36		
E106D.....40///.....	1/2”	4	0.36	0	16	15	40	30	27	5	36		
E106D.....45///.....	1/2”	4.5	0.41	0	14	13	40	30	27	5	36		
E106D.....52///.....	1/2”	5.2	0.47	0	10	9	40	30	27	5	36		
E106D.....64///.....	1/2”	6.4	0.64	0	5	4.5	40	30	27	5	36		

① Seal — Example: E106CE35///521 EPDM seal
② Coil — Coil 24V DC
③ Maximum allowable leakage < 0.2 nL/h

* REMARK: The maximum allowable pressure PS for steam is 6 bar (gauge pressure) with PTFE seals and 2,5bar with EPDM seals

COILS	Alternating Current ~50/60Hz Volt							Direct Current Volt			Electrical connection	Connectors
	12	24	48	110	220 230	240	380	12	24	48		
Series **2** Width 30 Code ②	20A	20B	20C	20D	20E	20F	20G	200	201	202	DIN 43650A	PG9 code 10349000
Series **5** Width 36 Code ②	52A	52B	52C	52D	52E	52F	52G	521	521	522	DIN 43650A	PG11 code 10349001

DESCRIPTION
Insulation class
Series 2=F Series 5=H
Voltage tolerance
AC +15% -10%
DC ± 10%
Protection class
IP65 with connector fitted
IP00 without connector
Continuous service ED100%

OPTIONS
Class H insulation (series 2)
Cable attached
Special coil voltages
Special coil powers

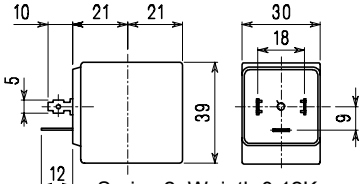

Series 2 Weigth 0.12Kg

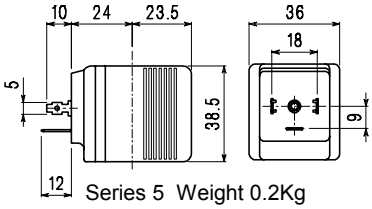

Series 5 Weight 0.2Kg

SPARE PARTS LIST
1. Coil fixing nut
2. Coil
3. Plunger
4. Armature tube with core

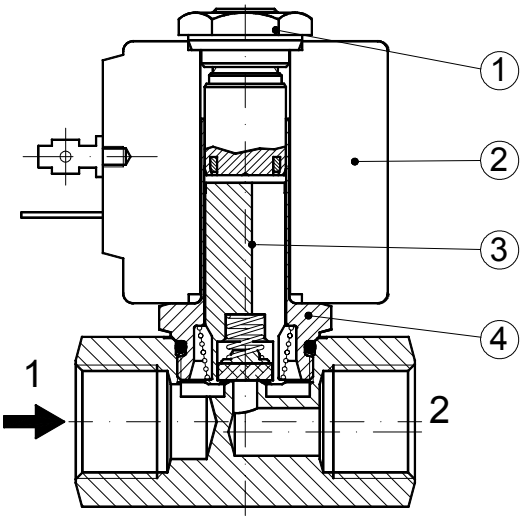

OVERALL DIMENSION

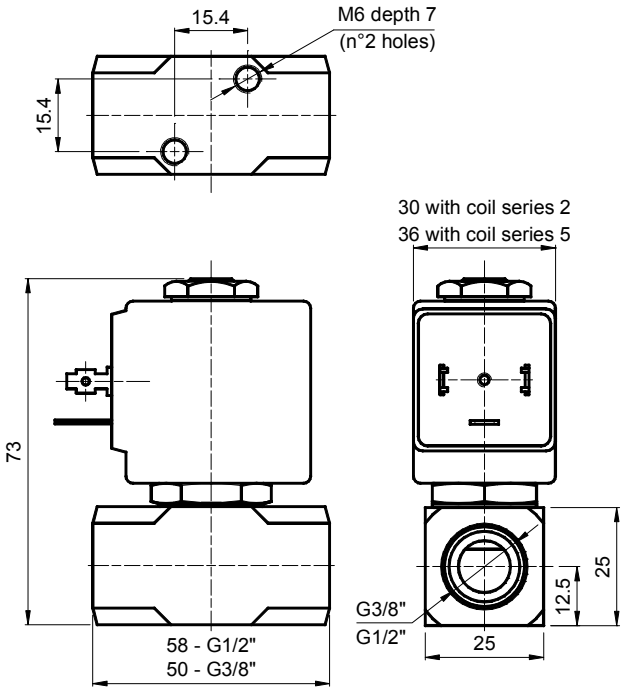

Weight with coil series 2 = 0.36 Kg
Weight with coil series 5 = 0.44 Kg